BOLYMIN

CONSULTING DISTRIBUTOR
POHL
POHL Electronic GmbH
Eduard-Maurer-Straße 11a · 16761 Hennigsdorf
Tel. +49 3302 81893-0 · Fax +49 3302 81893-99
www.pohl-electronic.de · info@pohl-electronic.de

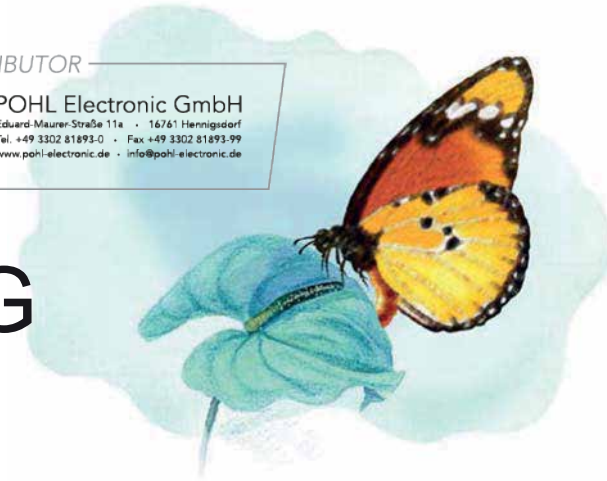

BC1602G

Feature

1. COB with metal frame
2. 5x7 dots with cursor
3. Built-in controller ST7066 or equivalent
4. + 5V single power supply
5. 1/16 duty cycle
6. LED B/L pins: 15/16, or A/K, or 1/2
7. Option: LED array / EL B/L
8. Option: +3V single power supply
9. Option: Negative Voltage

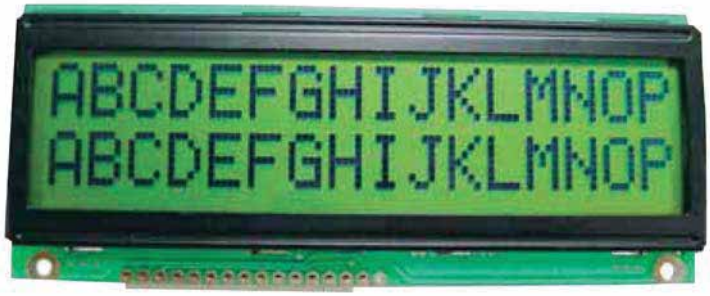

Mechanical Data

Item	Standard Value	Unit
Module Dimension	106.5 x 43.5	mm
Viewing Area	99.0 x 24.0	mm
Dot Size	0.92 x 1.10	mm
Character Size	4.86 x 9.66	mm

Pin Assignment

Pin	Symbol	Function
1	Vss	GND
2	Vdd	+5V (+3V option)
3	Vo	Contrast adjustment
4	RS	H/L register select signal
5	R/W	H/L read/write signal
6	E	H --> L enable signal
7~14	DB0~7	H/L data bus line
15	A	Power supply for B/L (+)/
16	K	Power supply for B/L (GND)

Electronic Characteristics

Item	Symbol	Condition	Typical Value	Unit
Input Voltage	Vdd	Vdd = +5V	5.0	V
Supply Current	Idd	Vdd = +5V	1.2	mA
LCD Driving Voltage	Vdd-Vo	25°C	4.2	V
LED Forward Voltage	Vf	25°C	4.2	V
LED Forward Current	If	25°C	240	mA
EL Power Current	Vel	Vel=110Vac/400Hz		V

Dimension

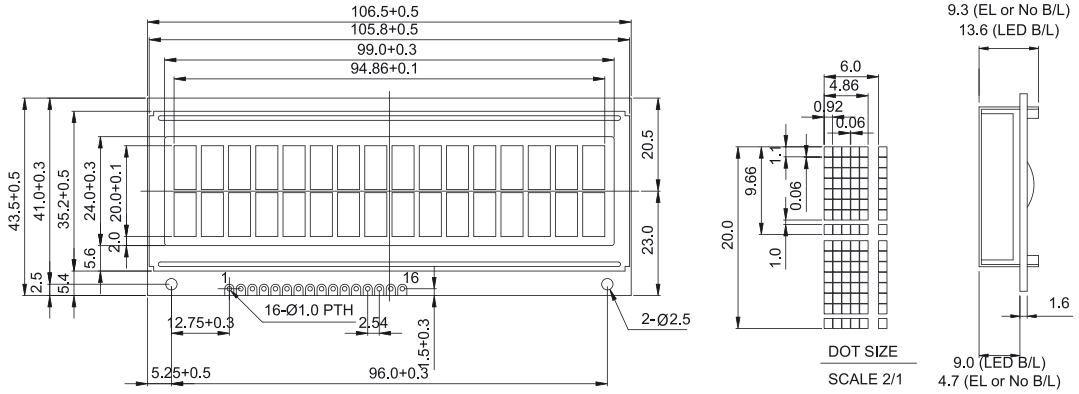

PIN NO.	SYMBOL
1	Vss
2	Vdd
3	Vo
4	RS
5	R/W
6	E
7	DB0
8	DB1
9	DB2
10	DB3
11	DB4
12	DB5
13	DB6
14	DB7
15	A
16	K